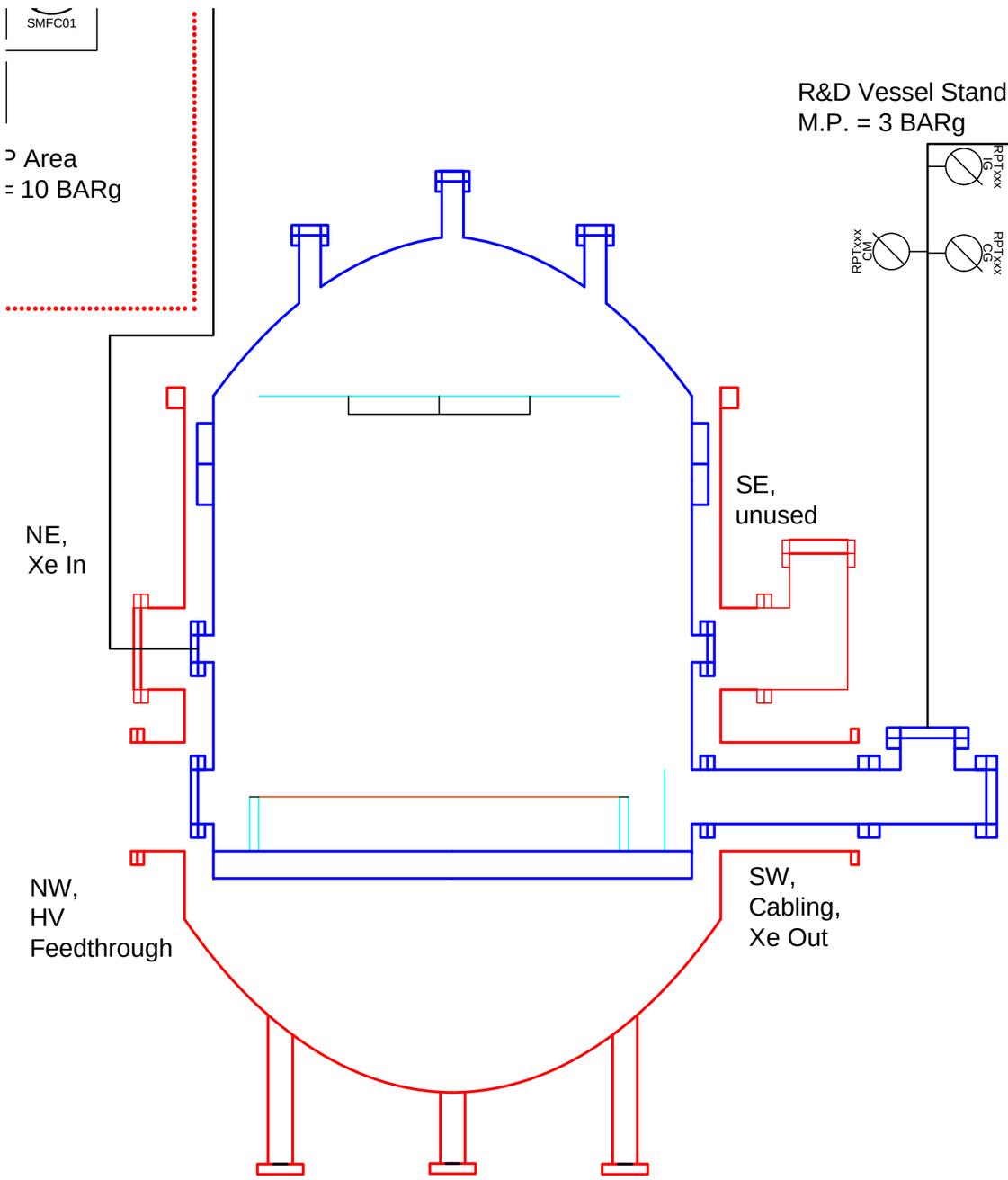

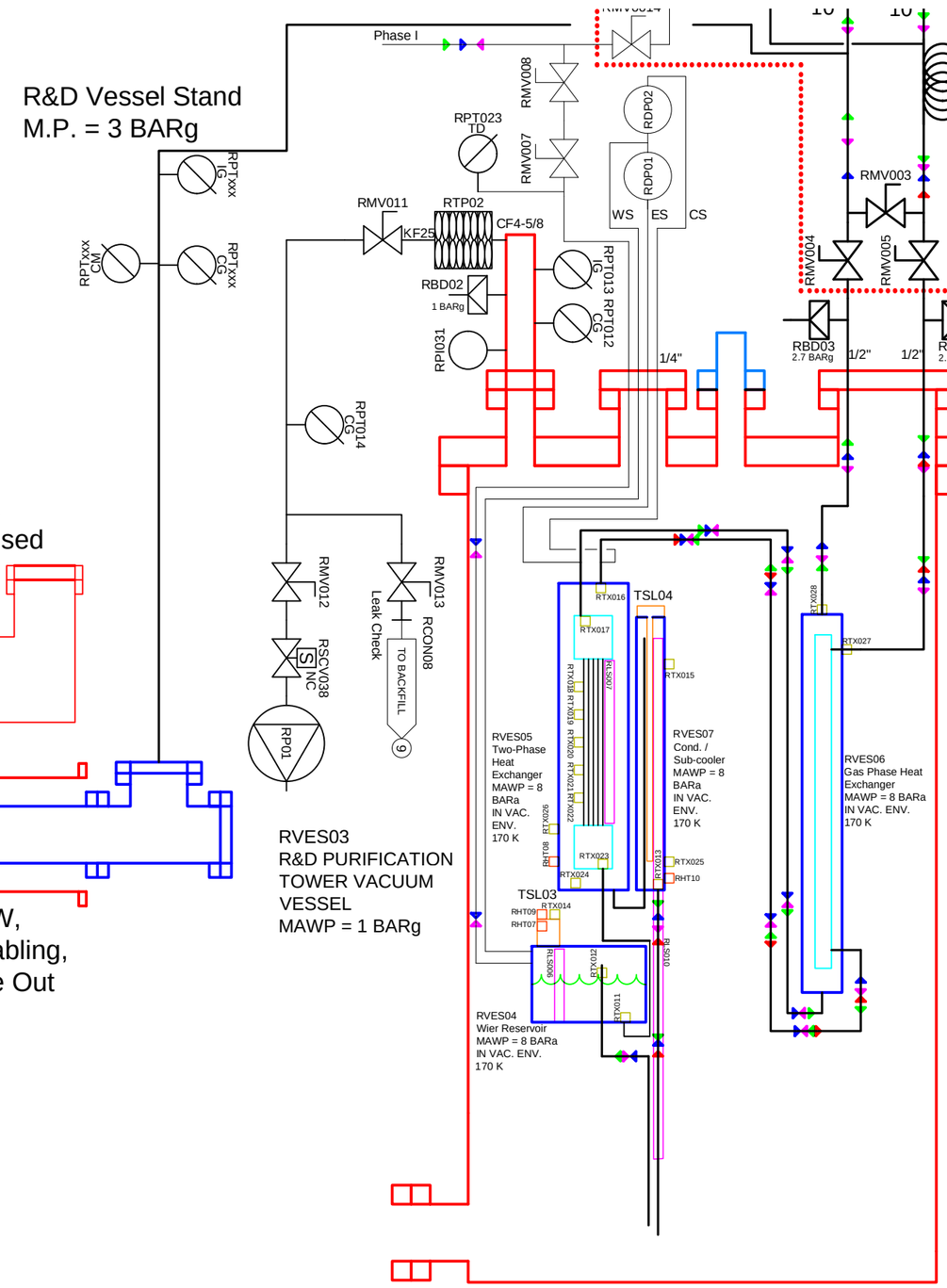

Process List

1. Evacuate System.
2. Condense through getter and MFC, into condenser, evaporator and bath.
3. Circulate through pump, getter, and MFC. Both through the HE and bypassing the HE.
   - a. Add Xenon to System.
   - b. Remove Xenon from system.
   - c. Perform Calibration.
   - d. Sampling capability, from bath, weir reservoir, before the getter, and after the getter.
4. Liquid Recovery.
5. Final Gas recovery.
6. Transfer xenon between SRV bottles.
7. Transfer from SRV to storage, and vise-versa through the getter.
   -There is currently no storage system but this feature is built in with the path between valves 1, 2, 3, and 4

Tubing Table			
Size	Part Number	MAWP	Line Size
0.250"	6L-T4-S-035-20	5100 PSI	
0.375"	6L-T6-S-035-20	3300 PSI	
0.500"	6L-T8-S-049-20	3700 PSI	
1.000"	6L-T16-S-065-20	2400 PSI	

Title: LZ R&D P&ID	
Maintainer: Thomas J. Whitis	
Email: tjw20@case.edu	Date: 1-6-17
Phone: 740-294-9371	Version: asbuilt_run6_1